OFFROAD

# CURSOR SERIES

# C13 ENT 407KW

407 KW(554 HP) @ 2100 RPM
2400 NM(245 KGM) @ 1400 RPM
**STAGE IIIB / TIER 4A**

## SPECIFICATIONS

| | |
|---|---|
| Thermodynamic Cycle | Diesel 4 stroke |
| Air Handling | TAA |
| Arrangement | 6L |
| Bore x Stroke (mm) | 135 X 150 |
| Total Displacement (l) | 12,88 |
| Valves per cylinder (n°) | 4 |
| Cooling System | liquid |
| Direction of Rotation (viewed facing flywheel) | CCW |
| Compression ratio | 16.5:1 |
| Injection System | EUI |

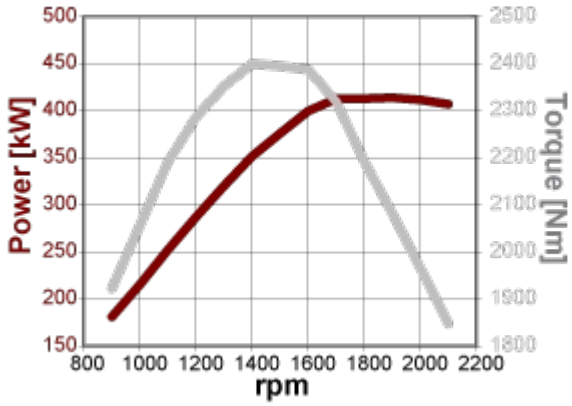


## PERFORMANCE

| | |
|---|---|
| Rated power [*] (kW (HP) @ rpm) | 407 ( 554 ) @ 2100 |
| Peak power (kW (HP) @ rpm) | 414 ( 563 ) @ 1900 |
| Peak torque (Nm (kgm) @ rpm) | 2400 ( 245 ) @ 1400 |
| High idle speed (rpm) | 2280 |
| Low idle speed (rpm) | ± 850 |
| DEF[**]/AdBlue consumption at peak torque and rated power (% of fuel cons.) | 7 - 8 |
| Minimum starting temperature without auxiliaries (°C) | -15 ° |
| Oil and oil filter maintenance interval for replacement [***] (hours) | 600 |

## STANDARD CONFIGURATION

| | |
|---|---|
| Flywheel housing (type) | SAE 1 - aluminium |
| Flywheel size (inch) | 14" |
| Intake manifold location | middle high / right side / front |
| Exhaust manifold location | middle high / left side / back |
| Turbocharger | fixed geometry with waste gate valve |
| Turbocharger location | center / left side |
| Fan transmission ratio | 1.37:1 |
| Distance between fan - crankshaft centers (mm) | X = -20 Y = 225 |
| Fuel filter (n°) | single cartridge - right side |
| Fuel prefilter | - |
| Fuel Pump | - |
| Oil filter (n°) | single cartridge - left side |
| Oil sump | suspended sheet / front sump |
| Oil vapours blow-by circuit | close case ventilation |
| Oil heat exchanger | integrated into the block |
| Oil filler | on valve cover |
| Starter | 24V - 5.5kW |
| Alternator | 24V - 90A |
| Engine stop device | by electronic control unit |
| Wiring harness | interface wiring loom with accessories |
| Painting color | grey |

## WEIGHT AND DIMENSIONS

**Dry Weight**
(standard configuration without: oil, cooling, starter, clutch, Compressor A/C, alternator) = Kg 1200

L = 1357
W= 900
H = 1148

mm

## NOT INCLUDED IN STANDARD CONFIGURATION

| | |
|---|---|
| Power Take Off (PTO) | - |
| PTO - transmission ratio | 1.36:1 |
| PTO - maximum available torque | SAE A 150Nm (9 teeth - ANSI B92,1) SAE B 150Nm (13 teeth ANSI B92,1) SAE B 200Nm (splined - DIN 5482) |
| Battery - minimum capacity recommended [*] (Ah) | 180Ah (24V) |
| Battery - minimum cold cranking capacity recommended [*] (A) | 800A (24V) |

[*] Power at flywheel according to 97/68 EC (without fan), after 50 hours running, 3% tolerance.
[**] DEF: Diesel Exhaust Fluid.
[***] Oil type: Approved engine oil specification: 15W-40 ACEA E7 / API CI-4 or 10W-30 ACEA E7 / API CI-4.

## Legend

**Arrangement**
L (in line)

**Air Handling**
TAA (Turbocharged with aftercooler)
TC (Turbocharged)
NA (Naturally Aspirated)

**Turbocharger**
WG (Wastegate)
VGT (Variable Geometry Turbocharger)
TST (Twin Stage Turbocharge)

**Injection System**
M (Mechanical):
ECR (Electronic Common Rail)
EUI (Electronic Unit Injector)

**Emission Standard**
EEV (Enhanced Environmentally friendly Vehicle)

**Exhaust System**
EGR (Exhaust Gas Recirculation)
SCR (Selective Catalytic Reduction)

FOR INFORMATION ON THE AVAILABLE RATINGS NOT LISTED IN THIS DOCUMENT PLEASE CONTACT THE FPT INDUSTRIAL SALES NETWORK OR VISIT OUR SITE WWW.FPTINDUSTRIAL.COM



FPT POWERTRAIN TECHNOLOGIES

## AFTER TREATMENT SYSTEM

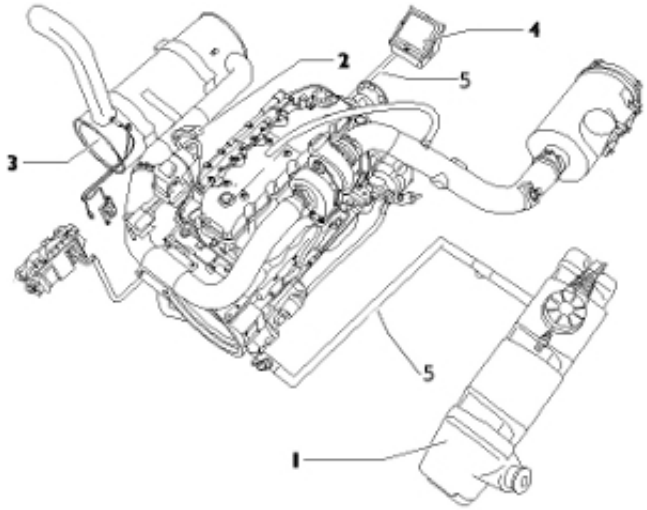


### SCR (Selective Catalytic Reduction) system

**Main components**

1) AdBlue/DEF* Tank: available options 156 liters
2) Dosing Module
3) SCR muffler: available options Vertical configuration
4) Supply Module
5) AdBlue/DEF* pipes

*DEF: Diesel Exhaust Fluid